Time: 3 Hours **Max Marks: 80**

N.B. 1) Question No.1 is compulsory
2) Solve any three questions from the remaining questions.
3) Assume suitable data if necessary.

1 Solve any four of the following.

(a) Explain trade-offs in analog design with the help of analog design octagon 5
(b) For a n-channel MOSFET draw- a)a basic small signal model b) small signal model considering channel length modulation effect c) small signal model considering body effect 5
(c) Explain the concept of clock feed through in the MOSFET sampling circuit 5
(d) Compare performance of various op-amp topologies 5
(e) Derive expression for input referred noise of CS stage 5

2 (a) 10

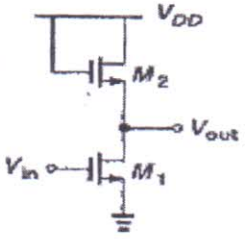

Identify the above network .Derive the gain equation of the above circuit.

(b) Derive equation of differential gain, common mode gain and CMRR of a differential amplifier circuit. 10

3 (a) The following circuit uses a resistor rather than a current source to define a tail current of 1mA. 10

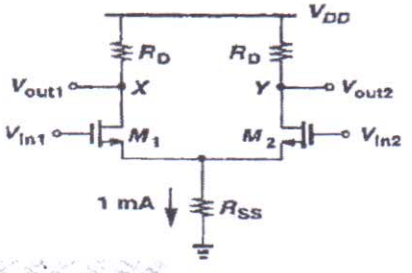

Assume $(W/L)_{1,2}=25/0.5$, $\mu_n C_{ox}=50\mu A/V^2$, $V_{TH}=0.6V$, $\lambda=0$, $V_{DD}=3V$
(a)What is the required input CM for which Rss sustains 0.5V?
(b)Calculate R_D for a differential gain of 5
(c) What happens at the output if input CM level is 50mV higher than the value calculated in (a)?

(b) Derive expression for voltage gain A_V and output resistance Ro of source follower stage. 10

Q.4 Design two stage operational amplifiers that meet the following specifications 20

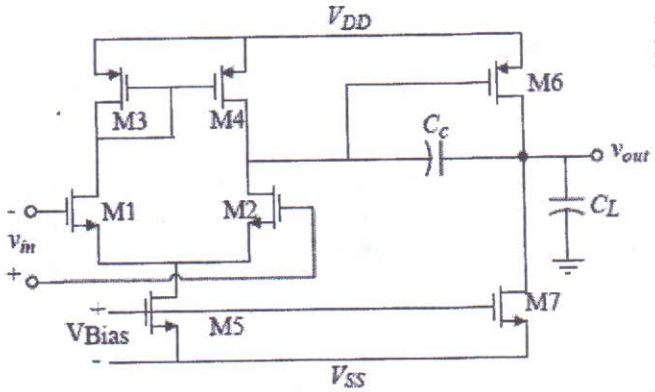

$A_V > 3000V/V$ $V_{DD} = 2.5V$ $V_{SS} = -2.5V$
Gain Bandwidth = 5MHz, Slew Rate > 10V/µs, 60° phase margin,
$0.5V < V_{out}$ range $< 2V$,
ICMR = -1.25V to 2V,
$P_{diss} \leq 2$ mW, $C_L = 10pF$
Use $K_N' = 100\mu A/V^2$, $K_P' = 20\mu A/V^2$, $V_{TN} = |V_{TP}| = 0.5V$, $\lambda_N = 0.06V^{-1}$,
$\lambda_P = 0.08V^{-1}$, $C_{ox} = 2.47fF/\mu m^2$.
Verify that the designed circuit meets required voltage gain and power dissipation specifications

5 (a) Explain the charge injection mechanism in MOS sampling circuits and also describe the errors contributed by the above effect. 10

(b) What is a band gap reference? Describe methods of implementation of band gap references 10

6 Write short note on any four

(a) Necessity of Millers theorem 5

(b) Gilbert Cell 5

(c) Charge Pump PLL 5

(d) Comparison of full custom design and semi custom design 5

(e) Performance parameters of VCO 5

****

(3 Hrs) Total Marks: 80

N. B. 1. Question No 1 is compulsory.
2. Solve any three from remaining.

Q 1 Answer any four : 20

(a) What is the need for Wireless Sensor network? Explain the WSN Protocol stack.
(b) Explain the need for DWDM. Compare it with WDM.
(c) "AAL 5 is a widely used ATM adaptation layer protocol": justify with
(i) Mention the main functions of AAL
(ii) Name practical Examples that use services of AAL5.
(d) Draw and explain different states of Bluetooth enabled device.
(e) What are the different network security threats and safeguards? Explain.

Q 2 (a) Draw and explain Bluetooth protocol stack in detail. 10
(b) Compare Ubiquitous and hierarchical access in Access Network design. Explain the steps for completing access layer design in detail. 10

Q 3 (a) In frame relay frame format, which bit is used to avoid network congestion? Draw and explain frame format of Frame relay. 10
(b) Bring out the advantages of Optical networking. With a neat sketch, explain the SONET hardware components along with its functional layers. 10

Q 4 (a) What is a firewall? What are the capabilities and limitations of firewall? Discuss the different types of firewalls, along with their advantages and disadvantages. 10
(b) With reference to ATM : 10
(i) Explain ATM Protocol architecture, bringing out the functions of ATM layer.
(ii) Compare the following ATM Adaptation Layer Protocols : AAL1, AAL2, AAL3/4, AAL5.

Q 5 (a) Draw and explain (i) IEEE 802.15.3 LR-WPAN Device architecture. 10
(ii) ZigBee technology
(b) Write short notes on : (i) B-ISDN model of ATM (ii) UWB 10

Q 6 Write a short note on :. (Any four) 20
(a) DMZ.
(b) SNMP
(c) RFID.
(d) RMON.
(e) VOFR

ETRX/CBSGS/SEM VIII/ Paper / Subject Code: 53006 / MEMS Technology / MAY 2019

Q. P. Code : 36789

(3 Hours) (Total Marks: 80)

Please check whether you have the right question paper.

N.B.: 1) Question No.1 is compulsory.
2) Answer any Three out of remaining five questions
3) Draw the neat diagrams wherever necessary.

Q1. **20M**

A] Explain Air Bag deployment System in brief.

B] What are micro-actuators pertaining to MEMS Technology? Give two examples.

C] Define piezoresistivity and list out all piezo-resistive coefficients.

D] Explain the role of sacrificial layer in fabrication of MEMS devices.

Q2.

A] What are ploymers? Draw structure of PMMA polymer and discuss its role in MEMS fabrication. **10M**

B] What do you understand by a clean room? Explain the steps in a standard RCA cycle during wafer cleaning. **10M**

Q3.

A] State different types of pressure sensors and explain in detail, fabrication steps for a piezo-resistive pressure sensor. **10M**

B] Draw neat diagram and explain lift-off process. Why would one use it, in MEMS fabrication? **10M**

Q4.

A] Explain the steps involved in fabrication of MEMS with proper illustration of surface micromachining. **10M**

B] Describe the DRIE process. How can DRIE achieve virtually perfect vertical etching? **10M**

Q5.

A] What do you mean by wafer bonding? Explain with neat diagram, different wafer bonding techniques. **10M**

B] Describe the representative process flow for fabricating the ink jet printer head by Hewlett- Packard. Also explain the operating principle of this MEMS device with proper illustration of Ink-firing mechanism. **10M**

Q6. Write short note on: **20M**

A] MEMS packaging & its challenges.

B] High Aspect Ratio MEMS fabrication.

C] Role of MEMS in IoT.

D] MEMS Accelerometer.

(Time: 3 Hours) [Total Marks:80]

NB.

(1) Question No.1 is compulsory.
(2) Attempt any three questions from remaining.
(3) All questions carry equal marks.
(4) Assume suitable data wherever necessary.

Q.1 Answer any **four** of the following:

a) With neat sketch define Joint and Link parameters. (5)
b) Explain how tool orientation is specified. (5)
c) What is homogeneous transformation matrix? Give the transformation matrix for pure translation and pure rotation. (5)
d) Explain template matching in robot vision. (5)
e) Justify "Inverse kinematics problem is not unique." (5)

Q.2 a) Develop the DH representation of a four axis SCARA robot and obtain its arm matrix. (10)

b) Let F= $\{f^1, f^2, f^3\}$ and M=$\{m^1, m^2, m^3\}$ be two initially coincident fixed and mobile orthonormal coordinate frames. Suppose the point P at the tool tip has mobile coordinates $[P]^M = [7,3,1]^T$. Find $[P]^F$ after the following transformations, (10)

1. Rotate M by $\Pi/2$ radians about f^3 axis
2. Then translate the rotated M by 4 units along f^1 axis.

Q.3 a) Find the new location and orientation of frame B after a differential rotation of 0.1 radians about the y axis followed by a differential translation of [0.1, 0, 0.2]. (10)

$$B=\begin{bmatrix} 0 & 0 & 1 & 10 \\ 1 & 0 & 0 & 5 \\ 0 & 1 & 0 & 3 \\ 0 & 0 & 0 & 1 \end{bmatrix}$$

b) Derive the force acceleration relationship for a 1 DOF system given below using Lagrangian mechanics as well as Newtonian mechanics. Assume the motion is linear with no inertia. (10)

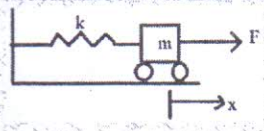

Q.4 a) Explain robot motion planning using Bug 1and Bug 2 algorithm. (10)
b) What is a GVD? Sketch all the GVD's resulting due to the basic interactions of the obstacle .Derive the necessary equations. (10)

Q.5 a) Explain Visibility Graph algorithm. (10)
b) Explain the different moments to characterize shapes. (10)

Q.6 Write short notes on any **four** of the following: (20)

a) Cartesian Space trajectory
b) Potential Functions
c) Shrink and Swell Operators
d) Work Space Envelope
e) Perspective Transformations

****

BE GS/ ETRX/ SEM VIII

Paper / Subject Code: 53003 / Elective II 2) Mobile Communication / MAY 2019

Q.P. Code :37961

[Time: 3 Hours] **[Marks: 80]**

Please check whether you have got the right question paper.

N.B: 1. Question.No.1 is compulsory.
2. Attempt any three questions from the remaining five questions.

Q.1		Answer the following:	20
	a)	What is meant by frequency reuse? What is its effect on the co-channel interference?	
	b)	State the radio specifications of GSM.	
	c)	Compare GSM and CDMA technologies.	
	d)	Explain the terms of soft, softer and soft-softer handoffs.	
Q.2	a)	Draw a well labelled diagram and explain in detail the architecture of GSM.	10
	b)	Explain GSM frame and time slot structure with the required figures.	10
Q.3	a)	Explain mobility and radio resource management in CDMA.	10
	b)	With a neat block diagram, explain the working of a reverse channel CDMA IS95 modulation process for a single user?	10
Q.4	a)	What is WCDMA air interface and discuss the important parameters in it.	10
	b)	Discuss the evolution path towards LTE and mention the important features of LTE.	10
Q.5	a)	Describe UMTS architecture with a neat diagram and interfaces.	10
	b)	Compare 3G and 4G technologies.	05
	c)	Write a detailed note on mobile IP.	05
Q.6		Write short notes on:	20
	a)	WiMax	
	b)	GPRS technology	
	c)	RFID	
	d)	MANET	