em-VIII - INST/CBSGS/Digital control system / May-2018

Q.P.Code: 36370

(3 Hours) **Total Marks : 80**

Note: (1) **Q1 is compulsory**

(2) Attempt **any three** from the remaining

(3) Assume suitable data wherever necessary.

Q.1 Answer **any four** from the following: **20**

a. Differentiate between zero order hold and first order hold.

b. Obtain the pulse transfer function for the system described by the discrete time state model

$$x(k+1) = \begin{bmatrix} 0 & 1 \\ -0.13 & 0.75 \end{bmatrix} x(k) + \begin{bmatrix} 0 \\ 1 \end{bmatrix} u(k)$$

$$y(k) = \begin{bmatrix} -0.5 & 1 \end{bmatrix} \begin{bmatrix} x_1(k) \\ x_2(k) \end{bmatrix}$$

c. Why is it necessary to perform bilinear transformation in order to perform Routh-Hurwitz test on a discrete time system?

d. Analyze the controllability and observability of the system described by

$$x(k+1) = \begin{bmatrix} 1 & -2 \\ 1 & -1 \end{bmatrix} x(k) + \begin{bmatrix} 0 \\ 1 \end{bmatrix} u(k)$$

$$y(k) = \begin{bmatrix} -0.5 & 0.5 \end{bmatrix} \begin{bmatrix} x_1(k) \\ x_2(k) \end{bmatrix}$$

e. Justify the statement 'Internal stability ensures controller realizability'

[Turn over

Q.2 **a.** Show the image of the following in Z plane

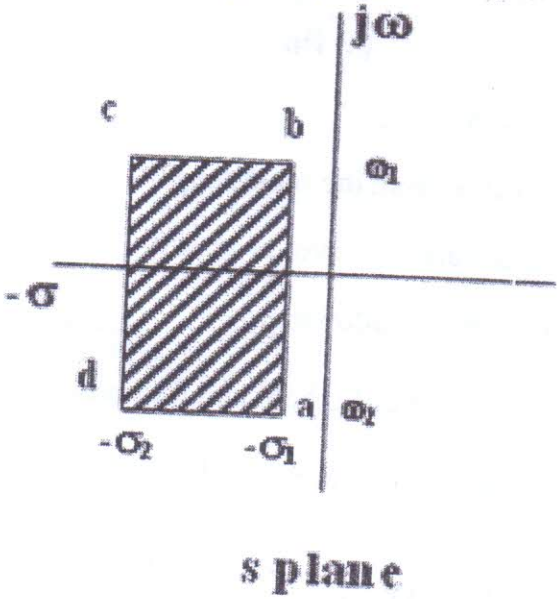

where $-\sigma_1 = -1, -\sigma_2 = -4.5, w_1 = j7$ and $w_2 = -j7$

b. Find the pulse transfer function of the following system using sampled signal flow graph approach.

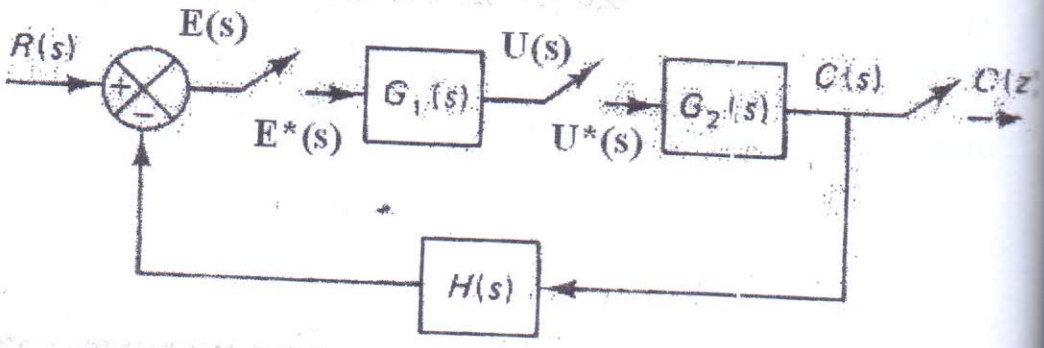

Q.3 **a** Determine the stability of a discrete time system with a characteristic equation

$$z^4 - 1.7z^3 + 1.04z^2 - 0.286z + 0.024 == 0$$

using Jury's stability test.

[Turn over

b. Obtain the discrete time state equation and output equation for the following continuous time system **10**

$$\begin{bmatrix} \dot{x}_1 \\ \dot{x}_2 \end{bmatrix} = \begin{bmatrix} -2 & 0 \\ -1 & 0 \end{bmatrix} \begin{bmatrix} x_1 \\ x_2 \end{bmatrix} + \begin{bmatrix} 1 \\ 0 \end{bmatrix} u(t)$$

$$y(t) = [0\ 4]\ x(t)$$

Take sampling time as 0.1 second.

Q.4 a. Give the controllable, observable and diagonal realization for the pulse transfer function **10**

$$G(z) = \frac{4z^3 - 12z^2 + 13z - 7}{(z-1)^2 (z-2)}$$

b. Consider system **10**

$$x(k+1) = G\,x(k) + H\,u(k)$$

Design a state feedback controller to place the closed loop poles at 0.5 and 0.6 of

$$G = \begin{bmatrix} 1 & -1 \\ 0 & 1 \end{bmatrix} \text{ and } H = \begin{bmatrix} 1 \\ 1 \end{bmatrix}$$

Also draw the block diagram of the closed loop system thus obtained.

Q.5 a. A PID controller is described by the following relation between input e(t) and output u(t): **10**

$$u(t) = k_p \left(e(t) + \frac{1}{T_I} \int_0^t e(t)dt + T_D \frac{de(t)}{dt} \right)$$

Obtain the discrete time PID controller transfer function U (z)/ E (z)

b. Design a prediction observer for dead beat response for the following system

$$x(k+1) = \begin{bmatrix} 0.16 & 2.16 \\ -0.16 & -1.16 \end{bmatrix} x(k) + \begin{bmatrix} -1 \\ 1 \end{bmatrix} u(k)$$

$$y(k) = [1 \ 1] x(k)$$

Q.6 a. Define position, velocity and acceleration error coefficient for a discrete time system. Also find the steady state error for step, ramp and parabolic inputs for a system with open loop transfer function

$$GH(z) = \frac{10(z+1)}{(z-1)(z^2-0.25z)(z+0.1)}$$

b. Design a discrete time PID controller for the following continuous time PID settings: K=1, T_d=2.5s, T_i=40s and sampling time T_s=1s to obtain bumpless transfer. Draw the block diagram of the system with the 2 degree of freedom controller so obtained.

Sem-VIII (CBSGS) / INST / Instrumentation project documentation & Execution / M-18

Q. P. Code : 40031

(3 Hours) **(Total marks : 80)**

1. (1) Question No. **1** is **compulsory**.
(2) Answer any **Three** out of remaining questions.
(3) Assumptions made should be **clearly** stated.

1 Explain any **Four** **20**
a) Define Project and explain the Project structure.
b) Explain the role of constructor.
c) Explain the format of Purchase requisition slip.
d) Explain what is PUNCH LIST and its importance.
e) Explain the cable scheduling with suitable example

2 a) List out the Engineering project deliverables and explain each one's importance **10**
b) Explain the importance of specification sheet. Explain the specification sheet for Thermocouple. **10**

3 a) Draw and explain the hook up diagram for DP transmitter & Prepare the BOM for it **10**
b) Explain what is Engineering procurement procedure and methods, Also explain the Purchase order (P.O) format **10**

4 a) Explain DCS or SCADA graphics in detail. **10**
b) Draw and explain Electronic loop wiring diagram for Level control loop. **10**

5 a) Explain different standard used in Instrumentation projects. **10**
b) Checkout procedure for Control valve and DP Transmitter. **10**

6 Write a short note on (**ANY TWO**) **20**
a) FAT, CAT and SAT
b) Draw and explain instrument location plan with example.
c) Project Scheduling techniques.

B.E. (Instr. Engg) Sem VIII CBSGS (R.2012) May-2018
Instr & System Design

Q. P. Code: 36609

Duration: 03 Hours. Total marks: 80

N. B. (1) Question No. **1** is **compulsory**.

(2) Answer any **Three** out of remaining questions.

(3) Assumptions made should be **clearly** stated.

Q. 1 Explain any **Four** **20**

a) Valve Sizing

b) Piping Geometry Factor

c) Expansion Factor

d) Control Panel Ventilation

e) ATC and ATO type of actuators

Q.2 a) Size the control valve for following data **10**

Fluid = water, $P_1 = 42.6$ psia, $P_2 = 34.7$ psia,

q = 1600 gpm $C_d = 17$ D = 8 '' schedule 40

b) What is choked flow? Explain Flashing and Cavitation with reference to fluid pressure and velocity profile diagram **10**

Q.3 a) Explain sources of valve noise. **10**

b) Explain RTD Installation and its Calibration. **10**

Q. 4 a) A 30" butterfly valve is to be operated under following conditions

Fluid = water, flow rate = 25000gpm, $P_1 = 65$ psia, $P_2 = 49$psia

$P_v = 0.6$ psia, Inside diameter = 29.25" What is the extent of cavitation? **10**

b) Explain IP classification **10**

Q.5 a) Explain Selection and sizing considerations for Actuator **10**

b) Explain working of relief valve and rupture disc **10**

Q.6 Write a note on **(ANY TWO)** **20**

a) Bath Tub Curve with reference to Reliability

b) System Engineering

c) Control room layout and its environment

BE/ INST/ CBSGS/ SEM VIII/ PPI/ 17-18

Q. P. Code: 31965

Time: 3 Hours Total Marks: 80

N.B. (1) Question No. **ONE** is compulsory.

(2) Solve any **three** questions from remaining **five** questions.

1. Answer the following: -- 20

(a) Explain the properties of moderator used in a nuclear reactor.

(b) Explain the importance of nonconventional energy sources.

(c) With respect to wind turbine, explain pitch control and yaw control system.

(d) Explain briefly the following boiler accessories:--

(i) Economizer (ii) Air Preheater.

2. (a) Explain water tube & fire tube boilers. 10

(b) Explain coal handling & ash handling plant of thermal power station. 10

3. (a) Draw the schematic diagram of modern steam power plant & explain its operation. 10

(b) Explain various methods of steam turbine compounding. 10

4. (a) Explain different types of wind turbines with neat diagram. 10

(b) With the help block diagrams, explain the operations of standalone & grid interactive Solar photovoltaic systems. 10

5. (a) Classify turbines & explain the working of pelton turbine with neat diagram. 10

(b) Draw schematic diagram of nuclear power station and explain its operation. 10

6. Write short notes on **any two**: -- 20

(a) Comparison of various power plants.

(b) Solar thermal system.

(c) Hydrology

****