INST / Paper / Subject Code: 49904 / ANALOG ELECTRONICS Nov - 2018.

Sem - III CBSGS

Duration: 03 Hours **Total Marks: 80 Marks**

Instruction to candidate:-

1. Question 1 is compulsory.
2. Attempt any three from remaining five questions.
3. All questions carry equal marks.
4. Assume suitable data wherever necessary.

Q1. Attempt any four [20 Marks]

Q1.a Define slew rate. For an op-amp having a slew rate of SR = 2.4 V/μs, what is the time taken for output to change from -15 V to +15 V.

Q1.b Explain operation of following comparator circuit. Consider input as sine wave of 10 V and supply voltage of 15 V.

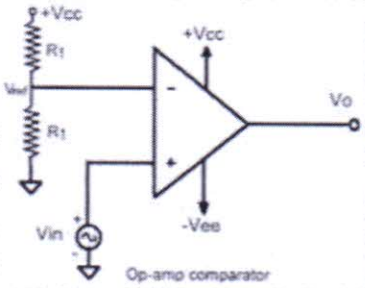

Q1.c With example, explain operation of transistor as a switch.

Q1.d Gate current is effectively zero for an FET, justify.

Q1.e Explain bridge rectifier.

Q2.a Determine output voltage. Assume, input to be sine wave of 5 V peak. Draw waveform considering ideal and practical diodes. [10 Marks]

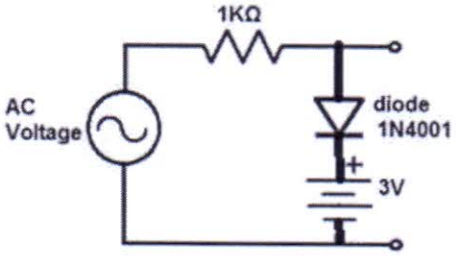

Q2.b For the Zener diode network, determine V_L, V_R, I_Z, and P_Z. [10 Marks]

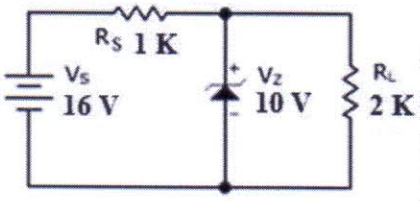

Q3.a BJT transistor with voltage divider bias circuit has following values, $V_{CC} = 20$ V, $R_1 = 40$ K, $R_2 = 4$ K, $R_C = 10$ K, $R_E = 1.2$ K, $\beta = 140$. Determine operating point and V_{BC}. [8 Marks]

Q3.b Determine operating point and V_{DS} for an FET self biasing circuit with $V_{DD} = 18$ V, $R_D = 1.5$ K, $R_S = 750$, $R_G = 1$ M, $I_{DSS} = 10$ mA and $V_P = -4$V [8 Marks]

Q3.c Explain E-MOSFET. [4 Marks]

Q4.a Derive the expression of stability factor for voltage biasing circuit. [10 Marks]

Q4.b Draw and explain series voltage regulator. [10 Marks]

Q5.a Draw the circuits for integrator and differentiator. Derive the necessary equation. Draw the frequency response of these circuits. [10 Marks]

Q5.b Explain three OpAmp instrumentation amplifier. [10 Marks]

Q6.a Derive output equation and calculate output voltage if, $V_0 = V_2 = V_4 = 5$ V and $V_1 = V_3 = 0$ V. [5 Marks]

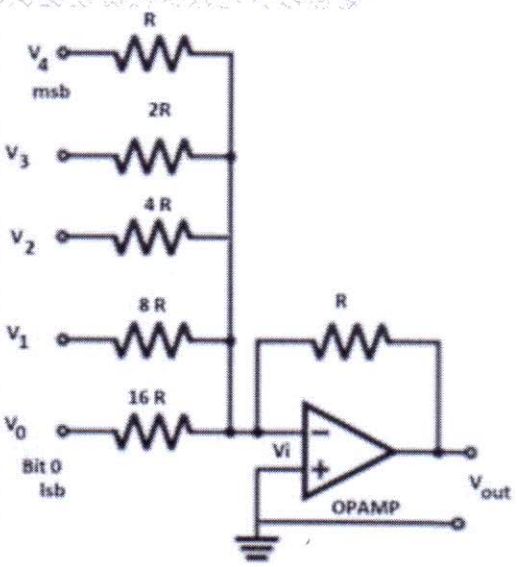

Q6.b Derive output equation and calculate output voltage if, $V_a = V_b = 700$ mV, $R_1 = R_2 = 2.2$ K, $R_3 = R_f = 10$ K. [5 Marks]

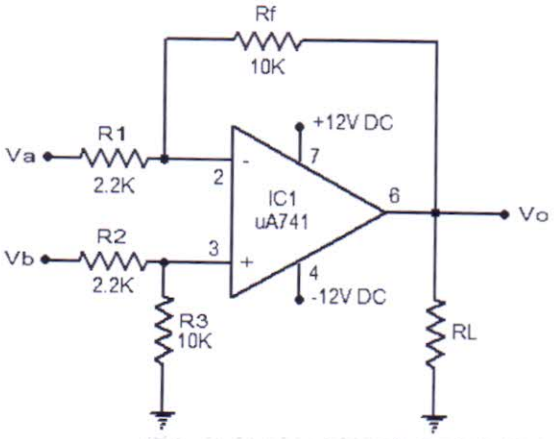

Q6.c Identify the circuit diagram. Calculate I_L for this circuit. [5 Marks]

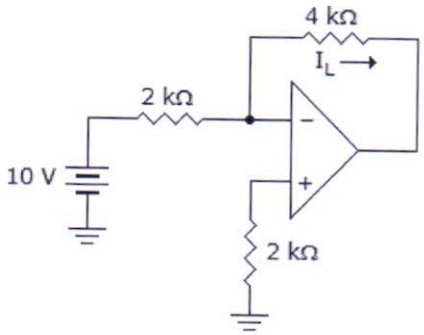

Q6.d Explain RC phase shift oscillator using OpAmp. [5 Marks]