SEM IV (CBSGS) Paper / Subject Code: 39302 / APPLIED MATHEMATICS - IV / MAY 2019
ETRX

Duration: 3 Hours Marks: 80

N.B: a) Question number 1 is compulsory

b) Solve any three from the remaining.

c) All the question carry equal marks

1. a) Find the extremal of $\int_0^{\pi} \frac{1+y^2}{y'^2} dx$ subject to $y(0) = 0, y(\pi) = 0$. [5]

b) Using Cauchy's Schwartz Inequality, show that $(acos\theta + bsin\theta)^2 \leq a^2 + b^2$, Where 'a' and 'b' are real. [5]

c) Show that Eigen values of Hermitian matrix are real. [5]

d) Evaluate $\int (z^2 - 2\bar{z} + 1)\, dz$ over a closed circle $x^2 + y^2 = 2$. [5]

2. a) Find the extremal $\int_{x_1}^{x_2} (y^2 - y'^2 - 2ycoshx) dx$ [6]

b) Find the Eigen values and Eigen Vectors of the matrix $A^2 + 3I$, where [6]

$$A = \begin{bmatrix} 8 & -6 & 2 \\ -6 & 7 & -4 \\ 2 & -4 & 3 \end{bmatrix}$$

c) Obtain all possible expansion of $f(z) = \frac{1}{z^2(z-1)(z+2)}$ about $z = 0$ indicating region of convergence. [8]

3. a) Verify Cayley - Hamilton Theorem for $A = \begin{bmatrix} 1 & -1 & 0 \\ 2 & 3 & -2 \\ -2 & 0 & 1 \end{bmatrix}$ and find A^{-1}. [6]

b) b) Using Residue theorem evaluate $\int_C \frac{e^z}{z^2 + \pi^2} dz$ where C is |z|=4. [6]

c) Show that a closed curve 'C' of a given fixed length (perimeter) which encloses maximum area is a circle. [8]

4. a) Find an orthonormal basis for the subspace of R^3 by applying Gram-Schmidt process, where $u_1 = (1,0,0), u_2 = (3,7,-2), u_3 = (0,4,1)$. [6]

b) Find A^{50} for the matrix $A = \begin{bmatrix} 4 & 3 \\ 7 & 8 \end{bmatrix}$ [6]

c) Reduce the Quadratic Form $xy + yz + zx$ to normal form by congruent transformation. [8]

5. a) Using Rayleigh-Ritz Method, find an approximate solution to the extremal problem $\int_0^1 (y^2 + 2yx - y'^2)dx, \quad y(0) = 0,\ y(1) = 0.$ [6]

b) Determine whether the set $V = \{(x, y, z): x = 1, y = 0 \text{ or } z = 0\}$ is a subspace of R^3 [6]

c) Show that the matrix $A = \begin{bmatrix} 8 & -6 & 2 \\ -6 & 7 & -4 \\ 2 & -4 & 3 \end{bmatrix}$ is diogonable.Also find the transforming matrix and diagonal matrix. [8]

6. a) Using Cauchy's Residue Theorem, evaluate $\int_0^{2\pi} \frac{d\theta}{2 + \cos\theta}$ [6]

b) Evaluate $\int_{1-i}^{2+i} (2x + 1 + iy)dz$ along the straight line joining $A(1, -1)$ and $B(2,1)$ [6]

c) Find the singular value decomposition of the matrix A= $\begin{bmatrix} 2 & 3 \\ 0 & 2 \end{bmatrix}$ [8]

****

m-IV - GTRX / Paper / Subject Code: 39301 / DISCRETE ELECTRONIC CIRCUITS / May-2019
BSGS)

Q.P. Code :10647

[Time: 3 Hours] **[Marks:80]**

Please check whether you have got the right question paper.

N.B:
1. Question no1 is compulsory and solve any three questions from remaining.
2. Draw neat and labeled diagrams.
3. Assume suitable data if it is required.

Q.1 Solve all: **20**

1) What is clipping circuit, for the given circuit draw output voltage waveform

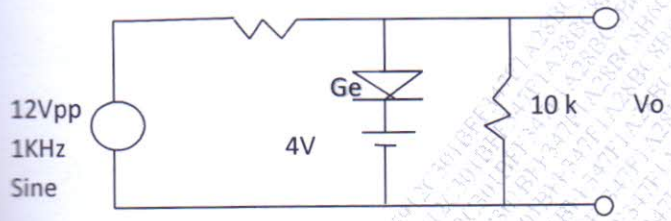

2) Explain voltage divider biasing circuit of E-MOSFET.
3) Explain how coupling and bypass capacitors affect low frequency response of the JFET Amplifier.
4) Give comparative chart of all –ve feedback amplifiers.
5) Explain any one method to improve CMRR of differential amplifier.

Q.2 a) For the given circuit find I_{CQ} and V_{CEQ}. **10**

10

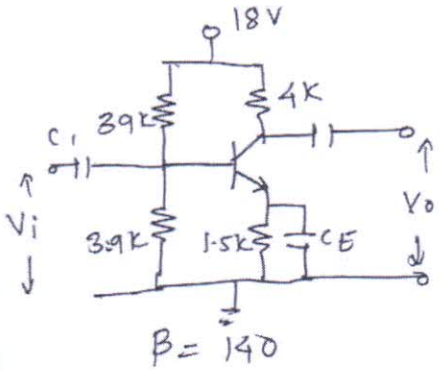

b) Derive equation of voltage gain, input resistance and output resistance of voltage divider biased D-MOFSET amplifier.

Q.3 a) What is the need of Multistage amplifier? Derive equation of overall voltage gain, input resistance and output resistance of CS-CS amplifier. **12**

b) Draw neat diagram of RC phase shift oscillator and explain its working. **08**

[P.T.O]

Q.P. Code :10647

Q.4 a) For Dual input balanced output BJT differential amplifier, derive equation of I_{CQ} and V_{CEQ}. 10

b) Find Av, Zi and Zo for the given circuit. 10

I_{DSS}=8mA,Vp=-3V,rd=50KΩ

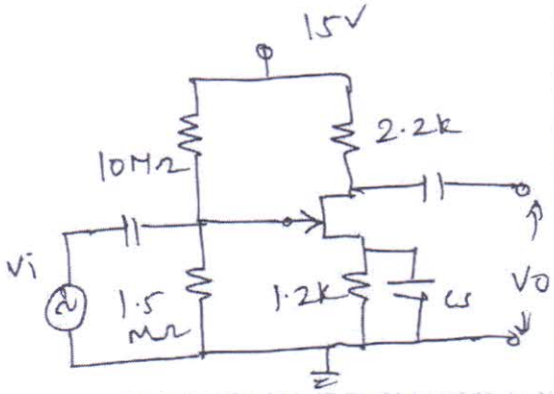

Q.5 a) Prove that maximum efficiency of transformer coupled class A power amplifier is 50% and also Explain how impedance matching is done. 10

b) For the given circuit find high cut off frequency. 10

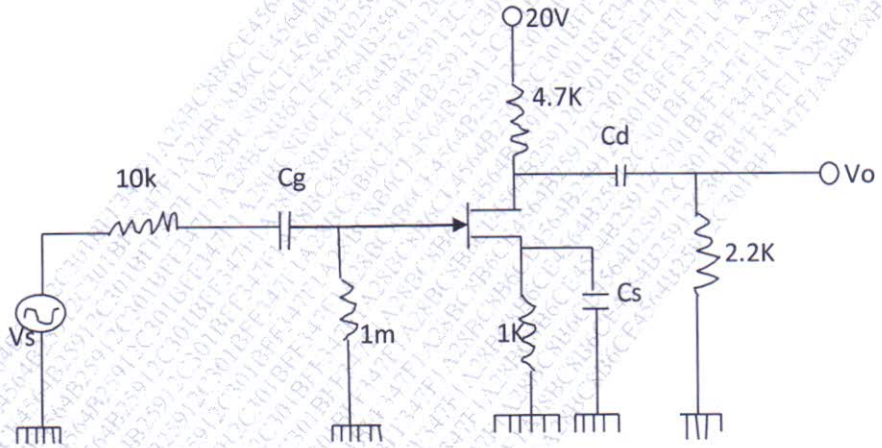

C_G=0.01 μF, Cc= 0.5 μF, Cs=2 μF

Rsig=10KΩ, RG=1MΩ, RD=4.7Ω

RS=1KΩ, RL=2.2k

I_{DSS}=8mA, Vp=-4V, rd=∞Ω, VDD=20V

Cgd=2pF, Cgs=4pF, Cds=0.5pF, Cwi=5pF, Cwo=6pF

Where Cwi – input wiring capacitance

& Cwo – input wiring capacitance

Q.P. Code :10647

Q.6 Write short notes on any FOUR **20**

1) Comparison of CB, CE & CC amplifier
2) Voltage series –ve feedback amplifier
3) Wilson current source
4) Darlington pair
5) Class AB Power amplifier

Q. P. Code: 36261

[Time: 3hours] [Max Marks 80]

1) Question no. 1 is compulsory
2) Solve any three from the remaining five questions.
3) Assume suitable additional data if necessary.

Q1) Answer the following questions: (20)

a) List the differences between 8086 and 8088 processor.

b) Explain the feature of pipelining and queue in 8086 architecture.

c) Explain the significance of /TEST, RESET and MN//MX signals in 8086 processor (/ indicates bar).

d) List the steps taken by 8086 processor in response to receiving an interrupt.

e) In 8086 bus cycle, explain the significance of ALE signal.

Q2)a)Classify and explain 8086 instruction set. (10)

b) Explain in brief 8086-8087 closely coupled configuration system. (10)

Q3) a) Explain 8086 in its minimum mode of operation. (10)

b) Explain the following 8086 instructions

i) CMPSB ii) DIV AX iii) LOOPE again iv) REP SCASB v) XLATB (10)

Q4) a) Write a detailed note on the interrupt structure of 8086 processor. (10)

b) Explain the need for DMA and modes of DMA data transfer. (10)

Q5) a) Explain the architecture of 8086 processor. What is the need for memory segmentation. (10)

b) Explain the need for bus arbitration and various bus arbitration schemes in loosely coupled configuration systems. (10)

Q6) Write short notes on: [ANY TWO]

a) Programmable interrupt controller – 8259. (10)

b) Programmable peripheral interface – 8255. (10)

c) 8086 addressing modes. (10)

Sem - IV
CBSGS | ETRX

Paper / Subject Code: 39304 / PRINCIPLES OF CONTROL SYSTEMS May - 2019

Q. P. Code : 26210

[Time: Three Hours] [Marks: 80]

NB:-

a) ***Question number 1 is compulsory.***
b) Attempt any three questions out of remaining questions.
c) Assume suitable data wherever necessary.

---

1. Attempt any four of the following questions: **20**

a) A feedback control system is represented by the characteristic equation, $S(S^2+S+1)(S+4)+K=0$. Find the range of K for making the system stable.

b) State and prove the properties of the State Transition Matrix.

c) What are the effects of a PD controller on a system?

d) Define different static error coefficients. State the equations for the error in a TYPE 0 system subjected to Step, Ramp and Parabolic input.

e) Explain the Mason's Gain formula with reference to Signal Flow Graph technique.

2. **a)** Derive the expression for output response of a second order under-damped control system, subjected to the Unit Step Input. **10**

b) Find the equivalent transfer function from R to C of the following system using the block diagram reduction technique. **10**

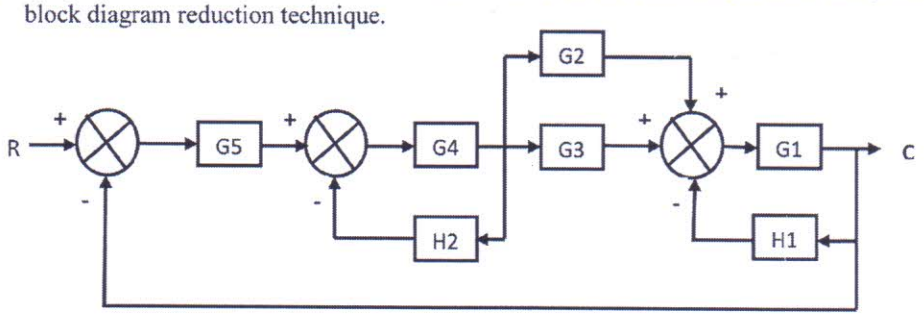

3. **a)** A unity feedback system has $G(s)=\dfrac{40(s+2)}{s(s+1)(s+4)}$. **10**

Determine:

(i) Type of the system.
(ii) All error coefficients.
(iii) Error for ramp input with magnitude 4.

b) Obtain the transfer function of the following electrical system using Signal Flow Graph technique. **10**

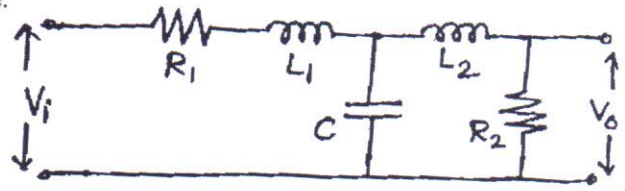

TURN OVER

Q. P. Code : 26210

4. **a)** Obtain the State variable model of the parallel R-L-C network shown below: **10**

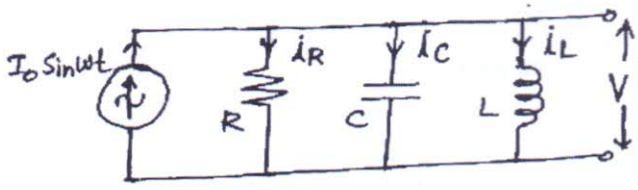

b) Test the controllability and observability of the system described by:

$$\begin{bmatrix} \dot{x}_1 \\ \dot{x}_2 \\ \dot{x}_3 \end{bmatrix} = \begin{bmatrix} 0 & 6 & -5 \\ 1 & 0 & 2 \\ 3 & 2 & 4 \end{bmatrix} \begin{bmatrix} x_1 \\ x_2 \\ x_3 \end{bmatrix} = \begin{bmatrix} 0 \\ 1 \\ 2 \end{bmatrix} u$$

and $y = [1\ 2\ 3]\,x$ **10**

5. **a)** Sketch the Bode Plot and determine G.M. & P.M. for the open loop transfer function given by

$$G(s) = \frac{4(s+5)(s+10)}{s^2(s+20)}$$ **10**

b) Construct the Root Locus for the following transfer function:

$$G(s)H(s) = \frac{K(s+13)}{s(s+3)(s+8)}$$ **10**

6. Write short notes on any three of the following: **20**

a) Model predictive control system.

b) Gain Margin and Phase Margin.

c) PID Controller.

d) Open Loop and Closed Loop control system.

EM IV (CBSGS) ETRX

Paper / Subject Code: 39306 / ELECTRICAL MACHINES / MAY 2019

[Time: 3 Hours] [Marks:60]

Please check whether you have got the right question paper.

N.B:
1. **Question.No.1** is **compulsory**.
2. Attempt any **three** questions from remaining **five** questions.
3. **Figures** to **right** indicate **full marks**.
4. Assume suitable **data**, if **any**.

Q1 Attempt **any three :**

(a)	A 6 pole, 50Hz Induction motor has a full load speed of 950 rpm. Calculate slip.	**05**
(b)	Derive emf equation of a dc motor	**05**
(c)	State the important applications of brushless DC motor	**05**
(d)	Explain v/f method of speed control of 3 phase induction motor	**05**

Q2

(a)	Develop equivalent circuit of a 3-phase Induction motor.	**08**
(b)	Explain the working of capacitor start Induction motor.	**07**

Q3

(a)	Describe the construction and working principle of a variable reluctance motor	**08**
(b)	With neat diagram, discuss the working of a3 point starter in a dc motor.	**07**

Q4

(a)	Name different types of unipolar brushless DC motor& describe any one type in detail	**08**
(b)	What are the advantages, disadvantages &applications of Switched reluctance motors?	**07**

Q5

(a)	Compare 3 phase induction motor with 3 phase synchronous motor.	**07**
(b)	Describe torque-slip characteristics of a three phase induction motor in 4 modes	**08**

Q6 **Write short notes on :**

(a)	3 point starter of a DC motor	**05**
(b)	Permanent magnet synchronous motor.	**05**
(c)	Double field revolving theory	**05**
