IV (CBSGS)/ETRX/EXTC/INST/ Applied Maths IV / May-2016

QP Code : 545802

(3 Hours) **[Total Marks: 80**

N.B.: (1) Question **No.1** is **compulsory**.
(2) Attempt **any Three** from the remaining.

1. (a) Find the extremal of the functional **5**

$$\int_0^1 [y'^2 + 12xy]dx \text{ subject to } y(0) = 0 \text{ and } y(1) = 1.$$

(b) Verify Cauchy - Schwartz inequality for u = (1,2,1) and v = (3,0,4) also find the angle between u & v . **5**

(c) If λ & X are eigen values and eigen vectors of A then prove that $\frac{1}{\lambda}$ and X are eigen values and eigen vectors of A^{-1}, provided A is non singular matrix. **5**

(d) Evaluate $\int_C \frac{e^{2z}}{(z+1)^4} dz$ where $C : |z| = 2$ **5**

2. (a) Find the extremal that minimises the integral **6**

$$\int_{x_0}^{x_1} (16y^2 - y''^2)\, dx$$

(b) Find eigen values and eigen vectors of A^3 **6**

where $A = \begin{bmatrix} 2 & 1 & 1 \\ 2 & 3 & 2 \\ 3 & 3 & 4 \end{bmatrix}$

(c) Obtain Taylor's and two distinct Laurent's expansion of $f(z) = \frac{z-1}{z^2 - 2z - 3}$ indicating the region of convergence. **8**

[TURN OVER

MUPD16615 VIVEKANAND EDUC
5/19/2016 4:44:32 PM
VIVEKANAND EDUCATION SOCIETY'S INSTITUTE OF TECHNOLOGY

3. (a) Verify Cayley-Hamilton Theorem for 6

$$A = \begin{bmatrix} 2 & -1 & 1 \\ -1 & 2 & -1 \\ 1 & -1 & 2 \end{bmatrix} \text{ and hence find } A^{-1}$$

(b) Using Cauchy Residue Theorem, evaluate 6

$$\int_{-\infty}^{\infty} \frac{x^2 - x + 2}{x^4 + 10x^2 + 9}\, dx$$

(c) Show that a closed curve 'C' of given fixed length (perimeter) which encloses maximum area is a circle. 8

4. (a) Find an orthonormal basis for the subspace of R^3 by appling Gram-Schmidt process where S $\{(1,1,1), (0,1,1)\ (0,0,1)\}$. 6

(b) Find A^{50}, where 6

$$A = \begin{bmatrix} 2 & 3 \\ -3 & -4 \end{bmatrix}$$

(c) Reduce the following Quadratic form into canonical form & hence find its rank, index, signature and value class where, 8

$$Q = 3x_1^2 + 5x_2^2 + 3x_3^2 - 2x_1x_2 - 2x_2x_3 + 2x_3x_1$$

5. (a) Using the Rayleigh-Ritz method, find an approximate solution for the extremal of the functional $\int_0^1 \{xy + \frac{1}{2}y'^2\}\, dx$ subject to $y(0) = y(1) = 0$. 6

(b) Prove that $W = \{(x,y) | x = 3y\}$ subspace of R^2. Is $W_1 = \{(a,1,1) | a \text{ in } R\}$ subspace of R^3? 6

MUPD16615 VIVEKANAND EDUCATION SOCIETY'S INSTITUTE OF TECHNOLOGY 19/2016 4:45:03 PM MUPD16615 VIVEK

(c) Prove that A is diagonizable matrix. Also find diagonal form and transforming matrix where $A = \begin{bmatrix} 1 & -6 & -4 \\ 0 & 4 & 2 \\ 0 & -6 & -3 \end{bmatrix}$ 8

(a) By using Cauchy Residue Theorem, evaluate $\int_0^{2\pi} \frac{\cos^2\theta}{5+4\cos\theta}\, d\theta$. 6

(b) Evaluate $\int_C \frac{z+4}{z^2+2z+5}\, dz$ where $C : |z+1+i| = 2$. 6

(c) (i) Determine the function that gives shortest distance between two given points. 5

(ii) Express any vector (a,b,c) in R^3 as a linear combination of v_1, v_2, v_3 where v_1, v_2, v_3 are in R^3. 3

VIVEKANAND EDUCATION SOCIETY'S INSTITUTE OF TECHNOLOGY 5/8/2016 1:45:08 PM MUPD16615 VIVEKANAND EDUC

Sem-IV-(CBSGS)/INST/Feedback control System/May-2016.

Q.P. Code : 551102

(3 Hours) **[Total Marks : 80**

N.B. : (1) Question No. **1** is **compulsory**
(2) Attempt any **three** questions out of **remaining five** questions
(3) Assume Suitable data, if necessary
(4) Figure to the right indicated full marks

1. Attempt any **four** **20**
   (a) Compare openloop and closed loop system
   (b) Explain Regenrative feedback
   (c) Explain the principle of superposition
   (d) Explain co-rrelation between time and frequency response
   (e) What is the errect of adding zeros to the system

2. (a) Obtain the overall transfer function C/R from the signal flow graph shown in figure. **10**

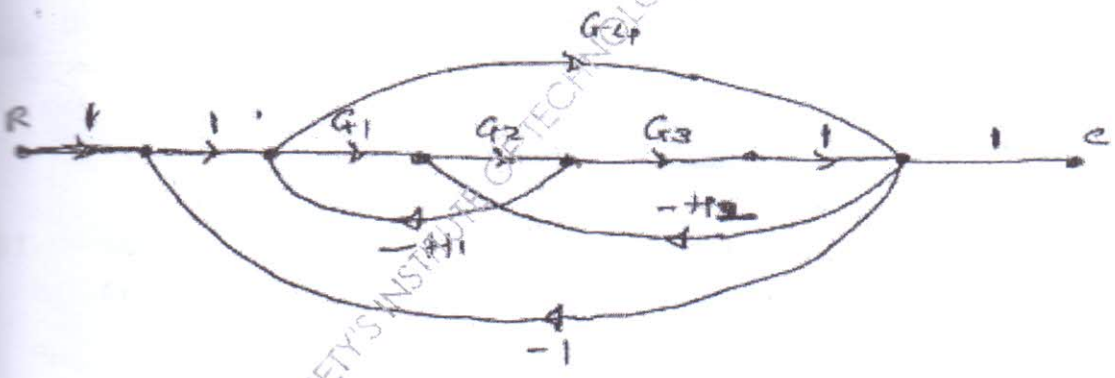

(b) A unity feedback control system has a open loop transfer function $G(s) = \frac{k}{s(s^2+4s+13)}$ sketch the rootlocus plot of a system. Find the value of K and frequency at which the root loci cross the jw axis. **10**

[TURN OVER

MUPD16615 VIVEKANAND EDUC
5/13/2016 4:48:59 PM
VIVEKANAND EDUCATION SOCIETY'S INSTITUTE OF TECHNOLOGY

3. (a) Sketch the bode plot and determine the gain cross over frequency for the transfer function given below. **10**

$$G(s) = \frac{4}{s(1+0.5s)(1+0.08s)}$$

(b) Write the differential equations governing the behaviour of mechanical system shown in figure. Also obtain an analogous electrical circuit based on Force-Voltage analogy. **10**

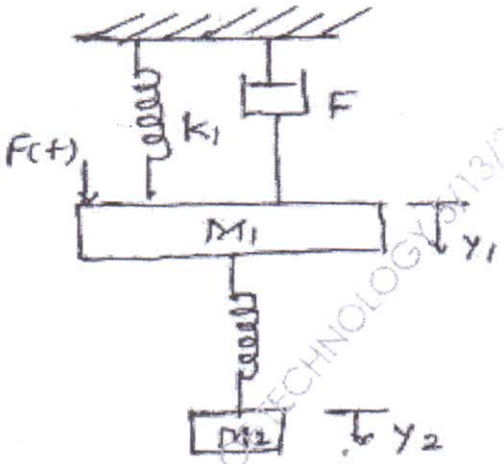

4. (a) The characteristic equations for a certain feedback control systems are given below. Deter mine the range of values of K for the system to be stable. **10**

(i) $s^4 + 22s^3 + 10s^2 + 2s + k = 0$

(ii) $s^4 + 12s^3 + 69s^2 + 198s + (20+k) = 0$

(b) The closed loop transfer function of the second order system is $\frac{C(s)}{R(s)} = \frac{wn^2}{s^2+2\xi wns+wn^2}$ obtain the equation for the output response c(t) for unit step input for under damped **10**

5. (a) (i) Sketch the polar plot of the transfer function given below **10**

$$G(s) = \frac{1}{(1+s)(1+2s)}$$

MUPD16615 VIVEKANAND EDUCATION SOCIETY'S INSTITUTE OF TECHNOLOGY 04/13/2016 1:48:59 PM

(ii) Define the gain margin and phase margin 10

(b) Using the block diagram reduction techniques, find the closed loop transfer function of the system given below. 10

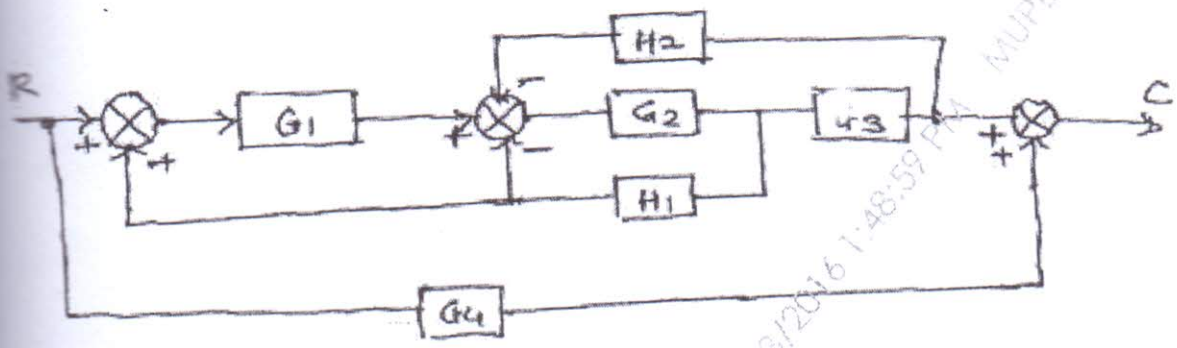

(a) (i) Explain the dominant condition 5

(ii) Explain Nyquist stability criterion. 5

(b) A unity feedback system has a tranfer function $G(s) = \frac{25}{s(s+8)}$ 10

Determine damping ratio, peak overshoot Rise time and settling time.

VIVEKANAND EDUCATION SOCIETY'S INSTITUTE OF TECHNOLOGY 5/13/2016 1:48:59 PM MUPD16615 VIVEKANAND EDUC

FE Sem IV CBSGS INST – Electrical Technology & Instruments

Q.P. Code : 551302

Duration: 3 Hrs. **Total Marks: 80**

Note: 1) Question no **1** is compulsory

2) Solve any **Three** questions from remaining questions

3) Assume suitable data if required and mentioned it

4) Figure to the right indicates full marks

Q.1 Solve the following **20**

a) Explain the types of DC motor

b) Explain the use of slip rings and brush assembly.

c) State the advantages of bridge circuits for the measurement of RLC.

d) What is sensitivity of voltmeters? Explain.

Q.2 a) A 230V, d.c. Shunt motor takes a no load current of 3A and runs at 1100 r.p.m. If the full load current is 41A, find the speed on Full load. Assume armature resistance as 0.25Ω and that of shunt field winding as 230 Ω. **10**

b) Explain the Torque slip characteristics of 3 Φ induction motor. **10**

Q.3 a) Explain series and shunt type of ohm meter **10**

b) A bridge is shown in the figure. Calculate the current through Galvanometer. where Rg = 300 Ω **10**

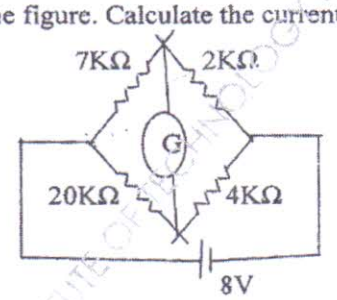

Q. 4) a) Explain how rotating magnetic field is produced in 3 Φ induction motor **10**

b) Describe how the Q-meter is used for the measurement of the following: **10**

i) Large value capacitor

ii) High value Resistor

iii) Self capacitance of a coil.

Q. 5) a) A 3 Φ, 4 pole, 50Hz induction motor has a star connected rotor. The voltage across each phase of the rotor at standstill is 121 V. The rotor resistance is 0.3Ω and standstill reactance is 0.8 Ω per phase. If in the running condition rotor current per phase is 15A, calculate the speed at which it is running. **10**

b) Explain the various performance parameters of digital voltmeters. **10**

Q.6) Write short notes on (**any two**) **20**

1) Star Delta Starter

2) Megger

3) Any one type of ADC

MUPD16615 VIVEKANAND EDUC 5/25/2016 1:42:44 PM

(3 Hours) **[Total Marks :80**

(1) Question No. **1** is **compulsory.**
(2) Attempt any **three** out of remaining.
(3) Assume data wherever necessary.

Attempt any **four** :- **20**

(a) Explain slope overload distortion and Granular noise in case of Delta Modulation.
(b) Why modulation is needed in communication systems?
(c) Explain effect of noise in FM modulation.
(d) Explain need of quantization in PCM. Also highlight method to reduce quantization noise.
(e) Compare PAM, PWM and PPM.

(a) List down the methods for SSB generation. Explain any one of them. **10**
(b) Explain any one method of FM generation with the help of neat diagram and wave forms. **10**

(a) Derive an expression for an AM signal. Also derive the power relationship. **10**
(b) In the block diagram shown in fig. Find out the carrier frequency, frequency deviation and modulation index at the points A and B. Assume that at the output of the mixer, the additive frequency component is being selected. **10**

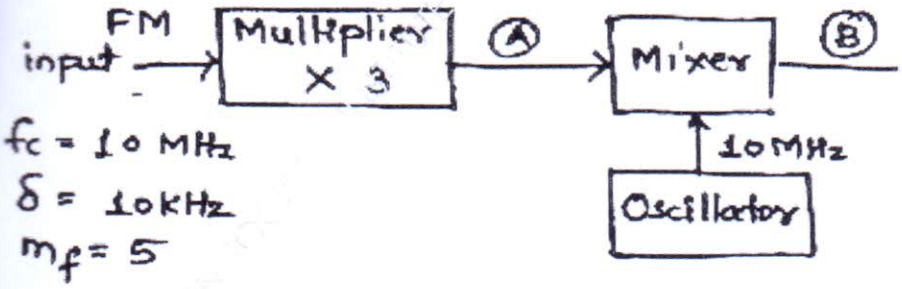

(a) What is Telemetry? Explain voltage telemetry and current telemetry with the help of a neat diagram? **10**
(b) An AM transmitter has antenna current of 2 A with modulation index of 60 percent. What will be the total antenna current if one more identical antenna is connected in parallel with the previous one, keeping the transistor output same? Will it affect modulation index. **10**

(a) Classify and explain various noise sources that affect communication, and derive friss formula for total noise factor. **10**

(b) Explain Differential pulse-code modulation (DPCM) in detail. **10**

Write short note on any four :- **20**

(a) TDM and FDM
(b) Communication modes
(c) Frequency shift keying
(d) OSI reference model
(e) Pulse Width Modulation

Sem-IV (CBSGS) / INST / Transducers-II / May-16.

Q.P. Code : 551502

(03 Hours) (80 Marks)

N.B: 1. Question No. 1 is compulsory.
2. Attempt **any Three** from remaining questions.
3. Assume suitable data wherever necessary.
4. Figure to right indicates full marks.

1. Answer the following-
   a) Explain capillary tube viscometer. 05
   b) What is vena contracta? State and explain types of fluid flow. 05
   c) State and explain the principle of piezoelectric transducer for pressure measurement. 05
   d) Explain solid flow meter. 05

2. a) Draw and explain pressure measurement using Bourdon tube and LVDT. 10
   b) State and derive Bernoulli's equation. 10

3. a) Explain the temperature compensation scheme for strain gauge and state applications of strain gauge. 10
   b) An orifice meter with orifice diameter 15 cm is inserted in a pipe of 30 cm diameter. The pressure difference measured by a mercury oil differential manometer on the two sides of manometer gives the reading of 50 cm of mercury. Find the rate of flow of oil of specific gravity 0.9 when the coefficient of discharge of meter is 0.64. 10

4. a) Draw and explain PH set up along with different PH electrodes. 10
   b) Explain the calibration procedure of pressure gauges using dead weight tester. 10

5. a) Draw neat sketch of pirani gauge and explain the same with applications. 10
   b) What is dynamometer? Explain in details working of absorption type dynamometer. 10

6. Write short note on- 20
   a) Equation for gauge factor in strain gauge.
   b) Any one method for torque measurement.
   c) Characteristics of head type flow meters.
   d) Force balance type pressure measurement.

MUBD16615 VIVEKANAND EDUCA
MUBD16615 VIVEKANAND EDUCATION SOCIETY'S INSTITUTE OF TECHNOLOGY 16/6/2016 2:05:59 PM